Cable tray separation for overhead wiring

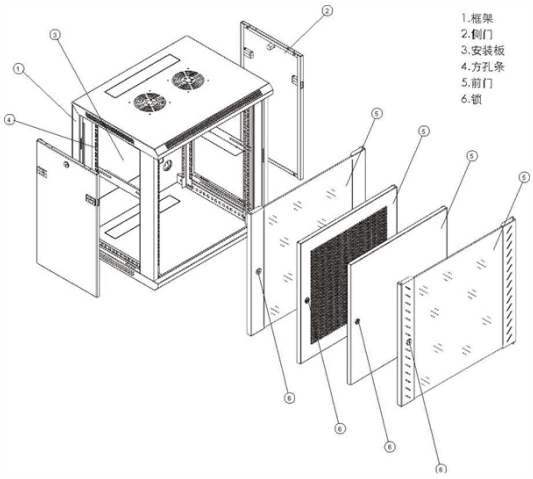

Overview

This design note adopts a 300 mm horizontal air-gap separation between primary and secondary life-safety trays on roofs, based on these regulatory requirements and established UK guidance. BS 7671:2018 +A2:2022 states: “Circuits of safety services shall be independent of other. Cable management is a crucial consideration of the physical infrastructure for optimizing system reliability, effective space utilization, and scalability. These systems, made from metal or plastic, are open structures designed to support electrical conductors, ensuring proper organization and safety. Cable Tray Types and When to Use Each 2. Fill Rules for Multiconductor Cables 3. Ampacity Derating. UK electrical and fire safety standards do not prescribe a fixed minimum separation distance for roof-mounted life-safety cable trays. We recognize the need for a complete cable tray reference source for electrical engineers and designers.

Article Content

Wire Basket Overhead Cable Tray Routing System Application Guide

The Wire Basket Overhead Cable Tray Routing System is composed of pathways, splices, mounting brackets, and accessories that allow the system to be configured for a wide range of applications and

Cable Tray Installation Rules (NEC 392) – Electrical Trader

Core rules for selecting, installing, grounding, and filling cable trays—clearances, materials, separation, and bonding explained.

© 2026 CGWEB NETWORK INFRASTRUCTURE - All rights reserved

Cable Tray Fill Rules (NEC 392)

This guide covers the cable tray types and their appropriate applications, the fill rules for each configuration, ampacity derating requirements, separation of power and signal cables, and the

Separation Gap for Primary and Secondary Life Safety Cable Trays

This design note adopts a 300 mm horizontal air-gap separation between primary and secondary life-safety trays on roofs, based on these regulatory requirements and established UK

Wire Basket Overhead Cable Tray Routing System

The Wire Basket Overhead Cable Tray Routing System is a robust cable management solution that optimizes system reliability, space utilization and scalability. It provides speed of deployment,

Cable tray manual

Instead of large conduits, cable channel may be used very effectively to support cable drops from the cable tray run to the equipment or device being serviced and is ideal for cable tray runs involving a

Wiring in Cable Trays: Your Guide to Tidy and Safe

Learn essential principles for wiring in cable trays. Our guide covers segregation, fill, bending, grounding, and labeling for safe, tidy, and reliable cable

Cable Tray Spacing Standards for Installation and Safety

Discover the essential cable tray spacing requirements for safe and efficient installation. Learn key standards, horizontal and vertical spacing, and more.

Best Practice Guide to Cable Ladder and Cable Tray Systems

Cable ladders and cable trays should be mounted far enough off the floor or roof to allow the cables to exit through the bottom of the cable ladder or cable tray.

Cable Tray Systems for Oil and Gas Utility Areas: Corrosion, Covers ...

Cable separation is also important. Power, control, instrumentation, communication, and safety-related cables may require different routes, barriers, dividers, or spacing according to the

Cable Trays Market Size, Share, Growth, Analysis, 2034

Cable Trays Market Size, Share & Trends Analysis Report By Product Architecture (Ladder Cable Trays, Wire Mesh (Basket) Trays, Solid Bottom/Trough Trays), By Material (Steel (Hot-Dip/Pre

© 2026 CGWEB NETWORK INFRASTRUCTURE - All rights reserved

Cable Tray Definition NEC: Essential Guide to NEC Compliance and ...

The cable tray definition NEC typically references a unit or assembly of units forming a rigid structural system used to securely hold cables. This official terminology includes various

Data Center Cable Tray Design Guide

Overhead tray systems offer better visibility and access for maintenance, facilitate easier segregation of different cable types, and are ideal for routing fiber optics and low-voltage systems . This setup also

Data Center Enclosure Cable Management Guide

Data center enclosure cable management depends on organized routing, separation and securing of power and data cables to protect airflow and reliability. Seven best practices guide

7 Best Cable Raceway Systems for Neat Cable

Best Cable Raceway Systems for Neat Cable Management: Discover top-rated solutions with easy installation, durable materials, and sleek designs to

Server Room Cable Management Setup: A Pro Guide

Master your server room cable management setup with our pro guide—boost efficiency, prevent downtime, and ensure compliance for your IT operations.

Mesh Wire Cable Tray for Underfloor & Overhead Cabling – Durable Cable ...

Mesh Wire Cable Tray for Underfloor & Overhead Cabling – Durable Cable Basket Manufacturer for Office & Retail Spaces No reviews yet certified $3

Cable Tray In Estonia, Cable Tray Manufacturers Suppliers Estonia

Versatility: Cable Tray comes in a variety of sizes, shapes, and configurations, allowing it to be adapted to various applications. It can be easily cut, shaped, or formed to meet specific requirements. it is

Related Video Reference

This video was associated with the source search result. Verify technical details against current product documentation and project requirements.

© 2026 CGWEB NETWORK INFRASTRUCTURE - All rights reserved

Contact Us

Continue your research online:

Website: https://cgweb.co.za
Technical inquiry: https://cgweb.co.za/project-enquiry.html

This document is for preliminary research. Verify specifications against current standards, product documentation and project requirements.

© 2026 CGWEB NETWORK INFRASTRUCTURE - All rights reserved