Differences between optical cables and electrical cables

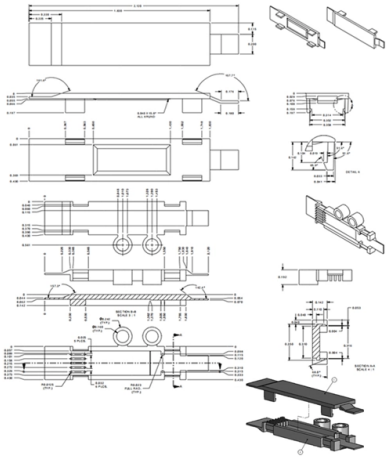

Overview

We often hear about cable type of Optical Cable vs. Electrical Cable, but what they are? And furthermore, what are the differences? Let''s dive right in.

Key Takeaways

Optical cables transmit data using light through glass or plastic fibers, while electrical cables transmit electrical signals through metal conductors like copper or aluminum.

Material and Structure

Electrical cables are composed of one or more metal conductors, typically copper or aluminum, insulated and protected by an outer jacket. They may include multiple strands and layers depending on the application, such as power transmission, control, or signal cables. Optical cables, on the other hand, consist of thin glass or plastic fibers that carry light signals.

These fibers are bundled together, protected by strength members, sheaths, and sometimes water-blocking materials to form a complete optical cable. The fiber itself is fragile and much thinner than a human hair.

Transmission Method

Electrical cables transmit electrical signals, which can carry power or low-end data. Optical cables transmit light signals, using the principle of total internal reflection to guide light through the fiber. This allows optical cables to achieve higher bandwidth and faster data transmission compared to electrical cables.

© 2026 CGWEB NETWORK INFRASTRUCTURE - All rights reserved

Performance and Distance

Optical cables excel in long-distance communication because light signals experience minimal attenuation and are immune to electromagnetic interference. They can transmit data over kilometers without significant signal loss, making them ideal for telecommunications, data centers, and high-speed networks. Electrical cables are generally limited to shorter distances (typically up to 100 meters for data transmission) due to signal degradation and RF interference.

They are more suitable for local connections, power distribution, and short-range networking.

Applications

Electrical cables: Power transmission, control systems, low-end data communication (e.g., telephone lines), and internal network connections within racks or buildings. Optical cables: High-speed data transmission, long-distance telecommunications, FTTH (fiber to the home), 5G networks, and backbone connections in data centers. Size, Cost, and InstallationOptical cables typically have a smaller diameter and lighter weight than electrical cables because they do not require thick metal conductors or heavy insulation.

However, they are more expensive and require careful handling during installation due to the fragility of the fibers. Electrical cables are cheaper, easier to install, and more robust, but they offer lower bandwidth and shorter transmission distances.

Summary

In essence, the key distinctions are: Medium: Light (optical) vs. electricity (electrical)Material: Glass/plastic fibers vs. metal conductorsDistance and speed: Optical supports longer distances and higher speedsApplications: Optical for high-bandwidth, long-distance data; electrical for power and short-range dataCost and handling: Optical is costlier and delicate; electrical is cheaper and more durable Choosing between the two depends on network requirements, distance, bandwidth needs, and budget.

© 2026 CGWEB NETWORK INFRASTRUCTURE - All rights reserved

Article Content

Optical Cable vs. Electrical Cable, What Are The Differences?

We often hear about cable type of Optical Cable vs. Electrical Cable, but what they are? And furthermore, what are the differences? Let''s dive right in.

Fiber Optic vs. Electric Cable Comparison | PDF

Fiber optic cables are more expensive but offer significantly higher bandwidth, lower weight, and faster transmission speeds with less signal loss. In contrast, conventional electric cables are cheaper,

Unraveling the Differences: Understanding Optical Cables and Their ...

Optical cables use light pulses to transmit data, while copper cables use electrical signals. This fundamental variance in transmission methods results in different capabilities and

800G AOC vs AEC: Choosing the Right Interconnect for Your Network

Active Optical Cable (AOC) and Active Electrical Cable (AEC), as high-speed cable solutions, are based on optical fiber and copper wire respectively, providing reliable point-to-point

Optical Interconnect Vs. Electrical Interconnect: All You Need to Know

In this blog, we will attempt to highlight the difference between optical interconnect and electrical interconnect – and aim to answer which of these technologies is best positioned to meet

Understanding Cable vs. Wire and Optical Cable vs. Fiber Differences

Find clarity on the differences between wire and cable. Learn how their flexibility and usage vary, helping you choose the right option for your electrical needs effectively.

What''s the Difference Between Optical and Electrical Technology for

Optical and electrical interconnect technologies have always competed to be the solution of choice. Each offers specific tradeoffs based on density, reach, reliability, cost, and power in a...

The difference between electrical cables and optical cables

Optical fiber cable consists of a bundle of fibers, referred to as optical cable. Optical fiber is the core part of the optical cable, and the optical fiber is protected by some components and their

Network Hardware – Optical vs Electrical Interface Modules

© 2026 CGWEB NETWORK INFRASTRUCTURE - All rights reserved

Let''s take a look at optical and electrical network interfaces—how they work, what they''re made of, and why it matters when building or upgrading your system.

Fiber Optic vs. Copper Cables: What''s the Difference?

Fiber optic cables do not conduct electricity, making them immune to electrical interference and safer in environments prone to electrical hazards. They can also carry voice signals

800G AEC, 800G OSFP to 800G QSFP-DD Active Electrical Cable,

The electrical interface of the module is compliant with the 800GAUI-8 interface as defined by IEEE 802.3ck, and compliant with OSFP MSA and QSFP-DD MSA.

Ethernet Cables Types: Cat 3, 5, 5e, 6, 6a, 7, 8 Wires Explained

This tutorial explains the Definition of ethernet cables, ethernet cable types, shielded cables, and Ethernet cables categories like Cat 3, 5, 5E, 6, 6a, 7, 9 ETC.

Types of Electrical Cables: A Complete Guide

Cables are ubiquitous in electrical engineering, industrial production, and daily life. Different environments and equipment require different types of

Hilink Optics QSFP QSFPDD OSFP 10G SFP transceiver, Optical

If you have any questions about Hilink Optics CWDM DWDM QSFP QSFPDD OSFP 10G SFP transceivers,we will give the professional solutions to you.

Differences Between Optical Modules SFP, SFP+, CFP, XFP, QSFP?

In addition, SFP+ direct connect cables (i.e., SFP+ DAC high-speed cable and AOC active fiber optic cables) connect two SFP+ ports without the need for additional optical modules and cables

Single Mode vs. Multimode Fiber Optic Cables

There are two main types of fiber optic cables: single mode and multimode. Although they can do the same job in some instances, the different construction methods make each of them better

Fiber Terminal Box vs Junction Box: Key Differences

Compare fiber terminal box vs junction box in functions, applications, and installation. Learn which suits FTTH fiber vs electrical wiring.

Structured Cabling Solutions

ICC is a structured cabling solutions manufacturer of copper & fiber optic connectivity products for commercial & residential applications.

© 2026 CGWEB NETWORK INFRASTRUCTURE - All rights reserved

Related Video Reference

This video was associated with the source search result. Verify technical details against current product documentation and project requirements.

Contact Us

Continue your research online:

Website: https://cgweb.co.za
Technical inquiry: https://cgweb.co.za/project-enquiry.html

This document is for preliminary research. Verify specifications against current standards, product documentation and project requirements.

© 2026 CGWEB NETWORK INFRASTRUCTURE - All rights reserved