Electrical distribution box installed inside the corrugated steel roof tile

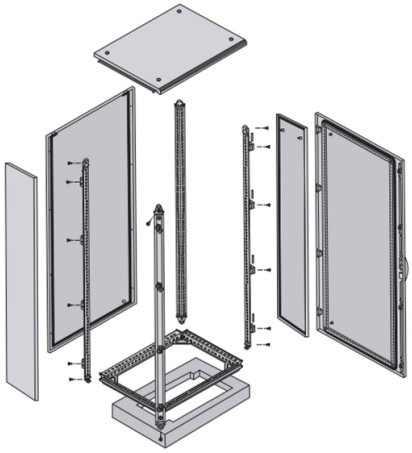

Overview

In the 2023 NEC®, new exception 2 in Section 300. 4 (E) allows raceways, cables, and boxes to be installed without any spacing restrictions where metal-corrugated sheet roof decking is covered with a at least 2 inches of concrete slab, measured from the top of the. In the 2023 NEC®, new exception 2 in Section 300. A similar. Then to contradict this, the nec immediately says, a cable, raceway or BOX shall NOT be INSTALLED in concealed locations in metal corrugated sheet decking. of the roof decking measured from the lowest surface of the roof decking to the top of the cable, raceway, or box [Sec. Notes: A similar requirement. During roof system replacement and sometimes when mechanically attaching rigid board insulation or roof membranes, roofing workers can encounter electrical conduit embedded within roof assemblies or placed directly beneath roof decks. 6 (E) broaden the protection requirements for wiring.

© 2026 CGWEB NETWORK INFRASTRUCTURE - All rights reserved

Article Content

300.4(E) Cables, Raceways, or Boxes Installed in or Under Metal ...

A cable, raceway, or box, installed in exposed or concealed locations under metal-corrugated sheet roof decking, shall be installed and supported so there is not less than 1 ½ inches measured from the

Corrugated roofing nec 300.4 E | Information by Electrical ...

The plans specified deep octagon masonry boxes extended through the corrugated metal deck, to be flush with the wood below, and rigid conduit above connecting the boxes.

Cables, Raceways, or Boxes Installed in or Under Metal-Corrugated

Cables, raceways, or boxes must be installed under metal-corrugated roof decking with a minimum clearance of 38 mm (1.5 in.) from the roof''s lowest surface. Installation in concealed areas of this type

NEC 300.4 (E) Watch How Close You Secure Conduit Under a

When you''re dealing with cables, pipes (raceways), or boxes under a roof made of metal-corrugated sheets, there''s a specific way they need to be installed. You''ve got to make sure there''s a

Code Q&A: Protection Requirements for Wiring Under Roof Decking

A. Cables, raceways, and enclosures under metal-corrugated sheet roof decking are not permitted to be located within 1½ in. of the roof decking measured from the lowest surface of the roof decking to the

Conduit concerns by Mark S. Graham 2019-10-01 | Professional Roofing

During roof system replacement and sometimes when mechanically attaching rigid board insulation or roof membranes, roofing workers can encounter electrical conduit embedded within roof

(E) Cables, Raceways, or Boxes Installed in or Under Roof Decking

Cables, raceways, or boxes must be installed at least 38 mm (1.5 in.) below the roof decking surface when placed under metal-corrugated sheet roofing. Installation in concealed areas of this type of

300.6(E) Wiring Methods and Materials in or Under Roof Decking.

A cable, raceway, or box, installed in exposed or concealed locations under metal-corrugated sheet roof decking, shall be installed and supported so there is not less than 1 ½ inches

© 2026 CGWEB NETWORK INFRASTRUCTURE - All rights reserved

Illustrated Catastrophes: Installed in Harm''s Way

Raceways, cables, and boxes installed beneath this type of roof decking must be installed and supported in a manner that provides at least 1½ in. of space between the lowest surface of the roof

300.4 (e) | Information by Electrical Professionals for Electrical ...

300.4 (E) Cables, Raceways, or Boxes Installed in or Under Roof Decking. A cable, raceway, or box, installed in ex- posed or concealed locations under metal-corrugated sheet roof

Add Outlet To Unfinished Basement Or Garage

WAGO 221 Lever nuts - geni /wKcBNC Knipex Hybrid Wire Strippers - geni /uVWn Locknut Wrench (3 Sizes) - geni /Wzm2Wtr Metal Box Used - geni /UUEBe GFCI ...

2019 California Electrical Code, California Code Of Regulations

(E) Cables, Raceways, or Boxes Installed in or Under Roof Decking. A cable, raceway, or box, installed in exposed or concealed locations under metal-corrugated sheet roof decking, shall be installed and

How To Install Corrugated Metal On Interior Walls Subway Tile

Installing corrugated metal on interior walls can add an industrial and modern touch to any room. The process involves measuring, cutting, attaching securely, leveling, and caulking to

Conduit concerns by Mark S. Graham 2019-10-01

A cable, raceway or box shall not be installed in concealed locations in metal-corrugated, sheet decking-type roofs. Exception: Rigid metal conduit and intermediate metal conduit shall not be

How to Easily Install Onto Corrugated Metal: The Complete Guide ...

Discover the simplest way to install fixtures onto corrugated metal with our innovative stock sheet solution. This step-by-step tutorial walks you through th...

Electrical practices — construction and demolition sites

Construction wiring (Construction and demolition wiring) means wiring systems installed to provide electrical supply for construction and demolition work, and is

An Overview of Installing Metal Roof Sheets

Learn everything you need to know about installing metal roof sheets with this comprehensive guide, from cutting and installing box profiles to securing them.

© 2026 CGWEB NETWORK INFRASTRUCTURE - All rights reserved

How To Do Outlets On Corrugated Metal Walls | The Garage Journal

I am working on my shop/apartment. The wainscoting is corrugated metal. I am stumped by how to trim the outlets. The corrugation is wide enough the plates will not **** up to it nicely. The

Contact Us

Continue your research online:

Website: https://cgweb.co.za
Technical inquiry: https://cgweb.co.za/project-enquiry.html

This document is for preliminary research. Verify specifications against current standards, product documentation and project requirements.

© 2026 CGWEB NETWORK INFRASTRUCTURE - All rights reserved